SIRUI, Capturing your Imagination!

Instructions

3T-15 + B-00 Series Tripod Kit

SIRUI WEBSITE

GUANGDONG SIRUI OPTICAL CO.,LTD.
Add: The Third Industrial District, Wuguishan Town, Zhongshan City, Guangdong, China (Zip Code: 528458)
Tel: 0760-88897373 Fax: 0760-88207062
E-mail: info@sirui-photo.com Website: www.sirui.com

3T-15 Series Tripod Data Chart

	Min H mm/inch	Max H mm/inch	Closed H mm/inch	Weight kg/lb	Max Load kg/lb
3T-15K	56/2.20	115/4.53	154/6.06	0.179/0.39	5/11
3T-15B	56/2.20	115/4.53	154/6.06	0.179/0.39	5/11
3T-15R	56/2.20	115/4.53	154/6.06	0.179/0.39	5/11

B-00 Series Ball Head Data Chart

	Dia. mm/inch	Height mm/inch	Weight kg/lb	Max Load kg/lb
B-00K	29/1.14	70/2.76	0.205/0.45	5/11
B-00R	29/1.14	70/2.76	0.205/0.45	5/11
B-00B	29/1.14	70/2.76	0.205/0.45	5/11

1. Know the Product

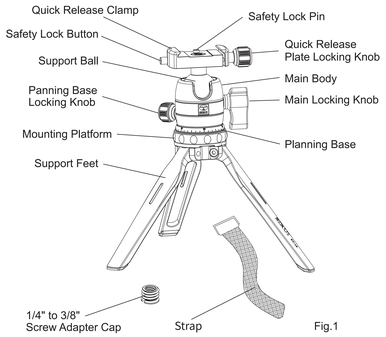

Fig.1

2. Know the Quick Release Plate and Quick Release Clamp

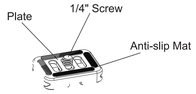

Fig.2-1

(2) Quick Release Clamp

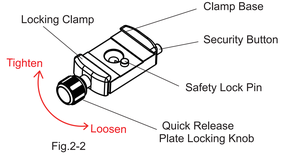

Fig.2-2

3. Install and Remove the Quick Release Plate

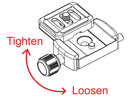

Fig.3-1

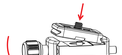

Fig.3-2

Fig.3-3

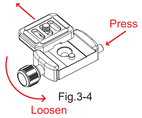

Fig.3-4

4. Operation - 2 Angles Adjustment of Tripod

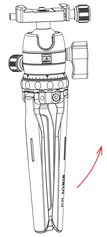

Lift up the Tripod Legs, turn the Mounting Plate Counter-clockwise or Clockwise to adjust for the 2 angles of the tripod.

Fig.4-1

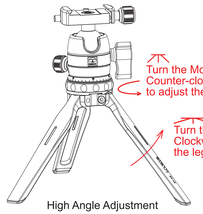

High Angle Adjustment

Fig.4-2

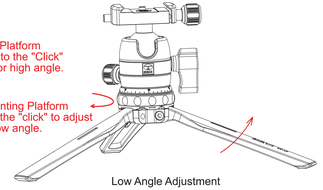

Low Angle Adjustment

Fig.4-3

1. Know the Product (Fig.1).
2. Know the Quick Release Plate and Quick Release Clamp (Fig.2-1 and Fig.2-2).
3. Install and Remove the Quick Release Plate (Fig.3-1 to Fig.3-4).
4. Basic Operation
1) 2 Angle Adjustment of Tripod (Fig.4-1 to Fig.4-3)
Turn the Mounting Platform Counter-clockwise or Clockwise to adjust the legs for high or low angle .
2) Straps
In order to get a better shooting experience, tripod legs can be bound with the straps to a fixed handrail or other rail type object.
① Thread the included Straps through the holes on the Tripod Legs, open the Buckles on the Straps (Fig.a).
② Thread the Straps through the Buckles for tightening (Fig.b).
3) Ball Head
① Attach your c

4. Operation - Straps

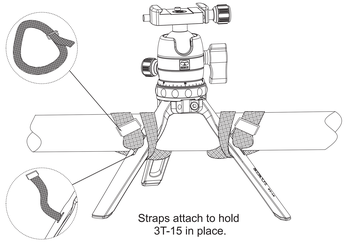

Straps attach to hold 3T-15 in place.

Fig.4-4

4. Operation - Ball Head

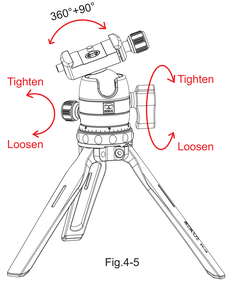

Fig.4-5

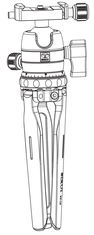

Closed Tripod

Fig.4-6

Remove the Ball Head from the Tripod Leg

Fig.4-7

5. Ball Head can be used on other SIRUI Tripods

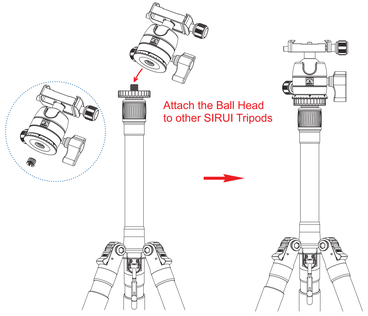

Fig.5-1 Fig.5-2

Attention:

- Do not exceed the recommended load limit of the head and/or tripod. (Please refer to product specifications.)
- Please make sure that the locks are securely tightened when in use.
- This product should not be used in environments that exceed the following conditions (-40 ~ +80°C/-40 ~ +176°F). And, when used in damp, dirty or dusty environments, please clean and dry thoroughly after use, to assure proper functioning in the future. It is not recommended to expose this product to saltwater. If exposed, please clean with mild soap and warm water and towel dry.
- Please keep from high temperatures and direct exposure to bright sunlight for extended periods of time.
- Please do not leave the equipment alone in a public place, which can be an inconvenience or hazard to others.
- To protect your camera gear, please remove it from the tripod/ball head when transporting from place to place.
- Please use a soft towel with warm water and mild soap to clean the locking system and gliding parts when necessary. Towel dry before storing the tripod.
- Under most situations, there is no need to lubricate any parts of this product. The addition of most lubricants will gum up the mechanisms and reduce their normal gliding characteristics. Please call or email us if you have any questions or special needs.
- Please keep this product away from all electrical power sources.

Dear SIRUI Customer,
Thank you for your purchase of SIRUI Professional Products!
SIRUI warrants that your purchase is free from defects in materials and workmanship under normal use during the Limited Warranty Period. The Warranty begins on the original date of purchase on your sales receipt and is not transferrable. If service is required, a copy of the sales receipt must be included with an explanation of the problem.

Product	Warranty Length
Tripods / Monopods / Accessories	6 years
Humidity Control Cabinet (Cabinet)	
Humidity Control Cabinet (Electronics)	3 years

Model: _ _ _ _ _ _ _ _ _ _ _ Date: _ _ _ _ _ _ _ _ _ _ _

Store: _ _ _ _ _ _ _ _ _ _ _ Serial Number: _ _ _ _ _ _ _ _ _ _

Warranty coverage can differ from region to region.
Please see the contact information below for product registration, information and service for the region the product was purchased in.

SIRUI 6 (six) Year Limited Warranty (3 Year Warranty for Electronic Parts). This warranty shall be limited to repair, adjustment and/or replacement at SIRUI or its authorized distributors option, of defective parts, free of charge (except the cost of transportation to the distributor/service center). Responsibility is limited to the actual cost of the item. Call or Email with questions and service before sending any product to the center in your region. Below is a listing of contact information for Product Registration, Service Inquiries and Questions.SIRUI will not be responsible for expenses or inconveniences, or consequential damages to equipment, or by breach of any expressed or implied warranties.

imitations:
Warranty is not transferable.
This warranty covers all defects encountered in normal use of the equipment and does not apply in the following cases:
1. If the equipment has been serviced by other than an authorized SIRUI Service Center.
2. Damage to the equipment is due to modification (including but not limited to, the removal of ballhead clamps), overloading, mishandling, abuse, accident, sand*, corrosives, water damage* or not following operating instructions.
3. No valid proof of purchase is provided.
4. Damage caused by acts of nature (including, but not limited to fires, floods or earthquakes).

*W Series Waterproof/Dustproof models – Warranty coverage can differ from region to region. Please see contact information below for product registration, information and service for the region the product was purchased in.

Warranty Address and Contact Information:
(Please contact the seller or the local distributor where the product was purchased for warranty issues or questions and before any product is sent.)

1.Guangdong SIRUI Optical Co., Ltd.
The Third Industrial District, WuguishanTown, ZhongshanCity, Guangdong, China
Tel:0086-760-88897373 Fax:0086-760-88207062
Http://www.sirui.com E-mail: info@sirui-photo.com
Service Hotline: 0086-400 830 2299

2.SIRUI USA, LLC
Add: 29 Commerce Court Verona, NJ 07044
www.sirui.com
Service: Toll Free 866-373-0829 E-mail: info@sirui.com
FOR PRODUCTS PURCHASED IN THE USA,PLEASE SEE:
For full details on USA Warranty Terms and Limitations:
www.sirui.com/warranty.html
To register products: www.sirui.com/product-registration.html

3.Focus Nordic AB
For technical support, service or repairs, please contact:
Sweden: info@focusnordic.se www.focusnordic.se
Norway: info@focusnordic.no www.focusnordic.no
Denmark: info@focusnordic.dk www.focusnordic.dk
Finland: info@focusnordic.fi www.focusnordic.fi
Iceland: info@focusnordic.is www.focusnordic.is
Latvia: info@focusnordic.lv www.focusnordic.lv
Estonia: info@focusnordic.ee www.focusnordic.ee
Lithuania: info@focusnordic.lt www.focusnordic.lt
Poland: info@focusnordic.pl www.focusnordic.pl

4. SIRUI Europe GmbH (European Service Center)
Add: Fredericiastr.2.14059 Berlin, Germany
Phone: +49 221 94 99 54-50 E-mail: info@sirui.de
(Please contact the seller or your local distributor for warranty issues.)

5. TSE Imaging BV
Add: Argonweg 135,1362AD Almere,The Netherlands
Telephone: +31 (0)36 8450348 E-mail: service@tse-imaging.nl
(Exclusive Distributor for Netherlands, Belgium, Luxemburg)
www.sirui-photo.nl

6. 대광엔터프라이즈
한국 총판, 기술지원 및 보증서비스 제공.
서울특별시 중구 남대문로 10, 1층
Tel: 02-752-3304 Fax: 02-774-9903
www.sirui.co.kr loweprok@gmail.com